Fenos®

# Installation Instruction

F453-Sira P 6090

## A

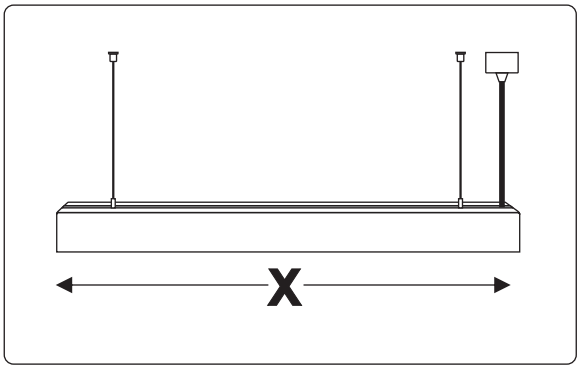


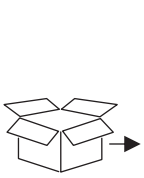

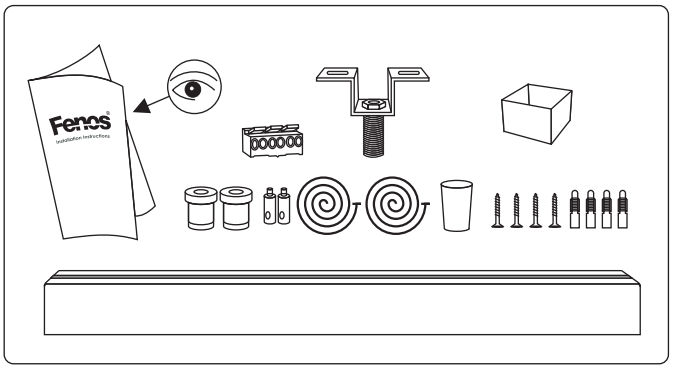


## B

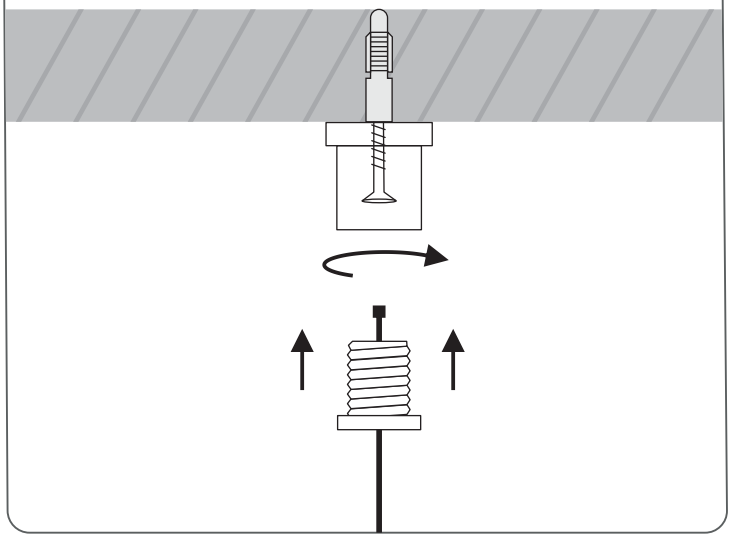

## C

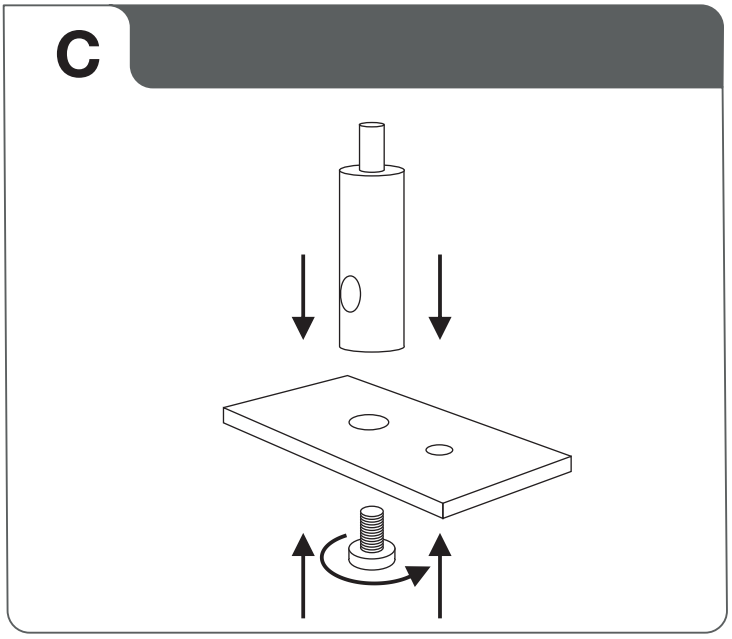

## D

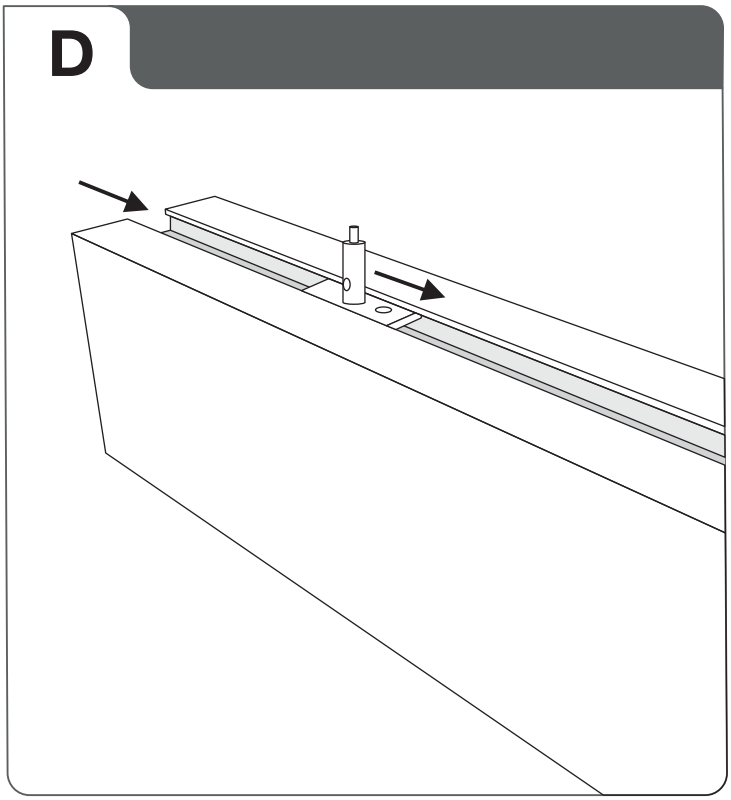

## E

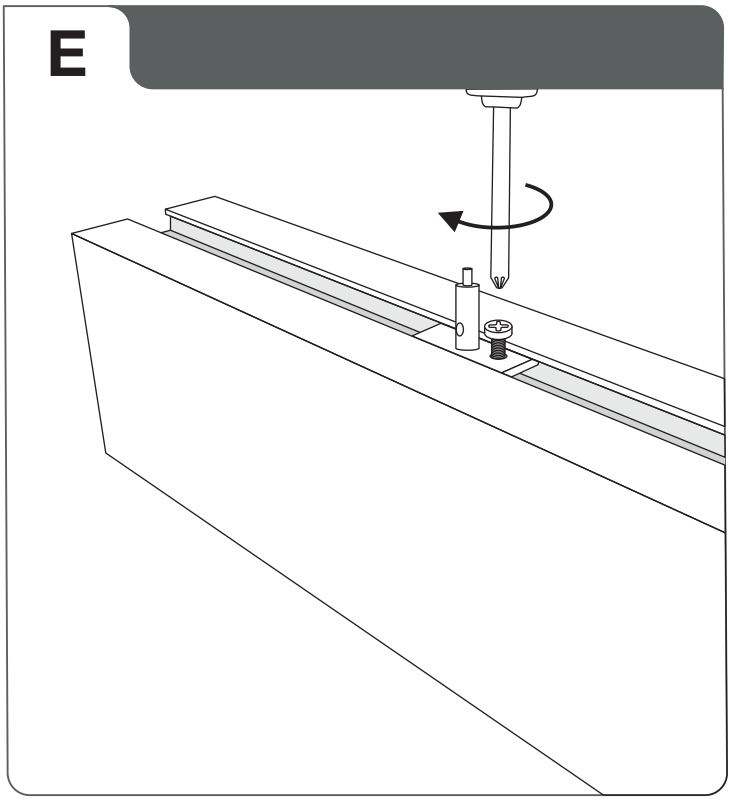

## F

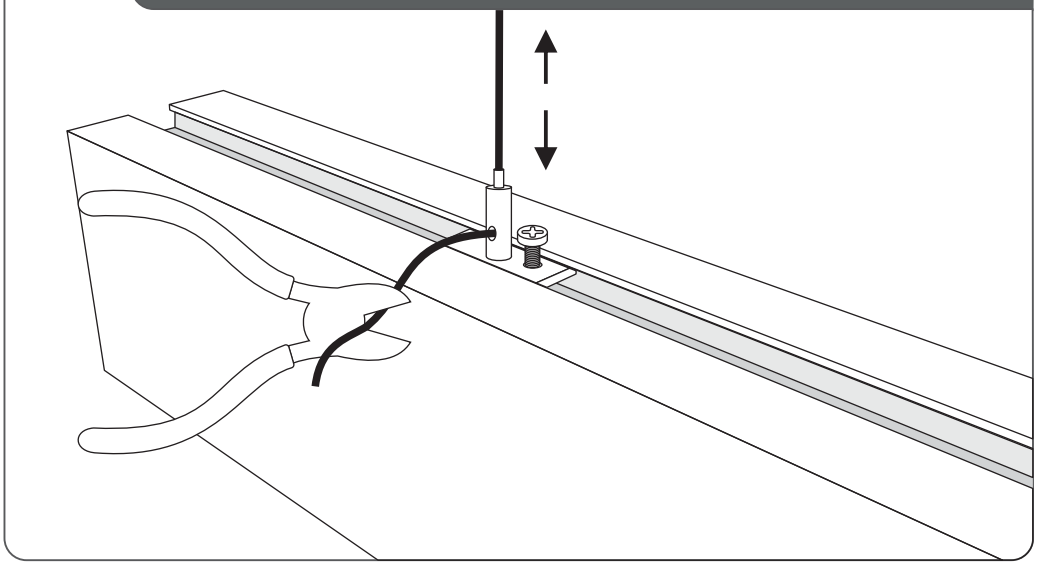

## G

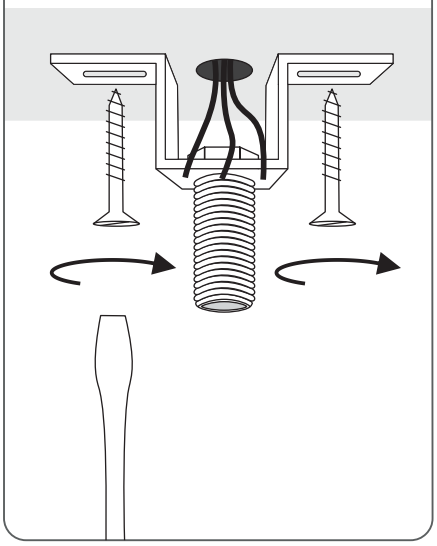

## H

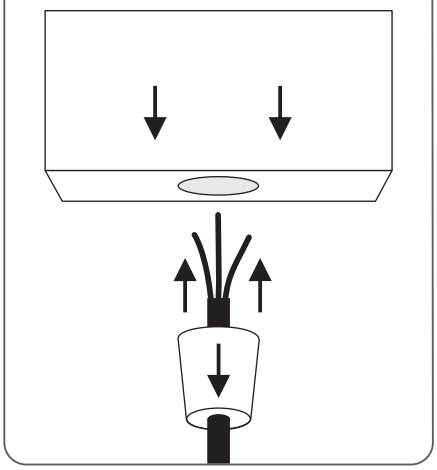

## I

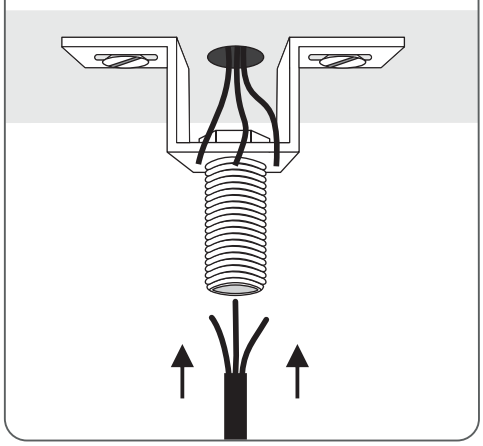

## J

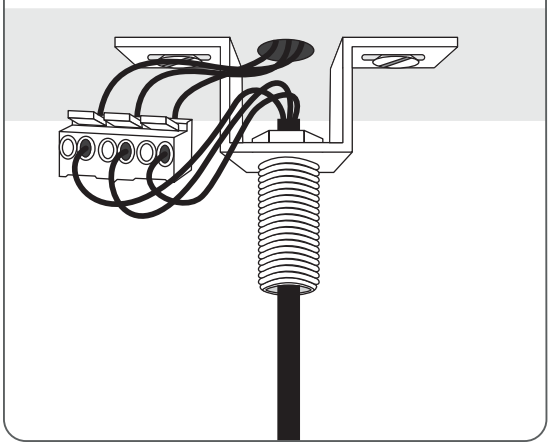

## K

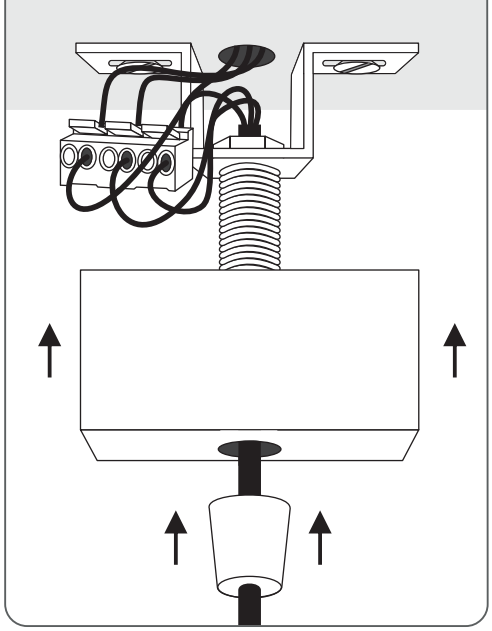

## L

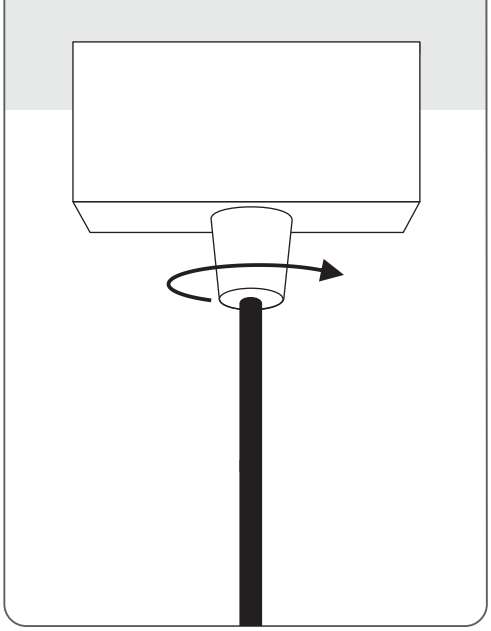
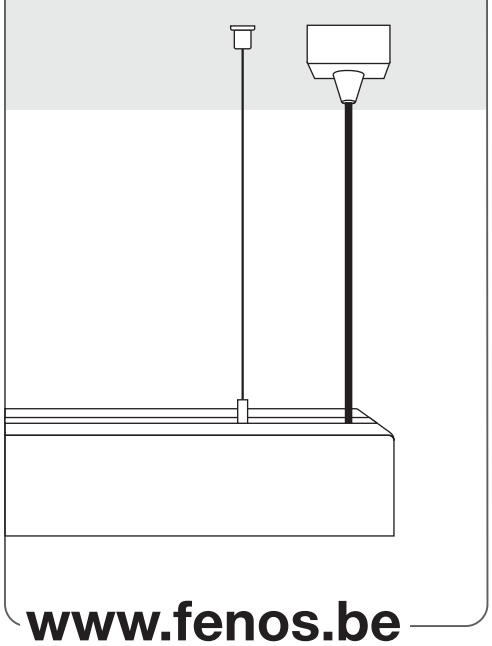
## M